US008284382B2

(12) **United States Patent**
Krasutsky

(10) **Patent No.: US 8,284,382 B2**
(45) **Date of Patent: Oct. 9, 2012**

(54) **LOOKDOWN AND LOITERING LADAR SYSTEM**

(75) Inventor: **Nicholas Krasutsky**, Carrollton, TX (US)

(73) Assignee: **Lockheed Martin Corporation**, Bethesda, MD (US)

(*) Notice: Subject to any disclaimer, the term of this patent is extended or adjusted under 35 U.S.C. 154(b) by 0 days.

(21) Appl. No.: **12/467,118**

(22) Filed: **May 15, 2009**

(65) **Prior Publication Data**

US 2010/0073664 A1 Mar. 25, 2010

Related U.S. Application Data

(63) Continuation of application No. 11/177,782, filed on Jul. 8, 2005, now abandoned.

(51) **Int. Cl.**
G01B 3/00 (2006.01)

(52) **U.S. Cl.** **356/4.01**; 356/3.01; 356/3.15; 356/4.1

(58) **Field of Classification Search** 356/3.01–3.15, 356/4.01–4.1, 5.01–5.15, 6–22, 28–28.5
See application file for complete search history.

(56) **References Cited**

U.S. PATENT DOCUMENTS

4,085,910	A	4/1978	Baker	244/3.16
4,615,587	A	10/1986	Krasutsky	350/353
4,970,403	A	11/1990	Krasutsky	250/216
5,200,606	A	4/1993	Krasutsky et al.	250/216
5,224,109	A	6/1993	Krasutsky et al.	372/29
5,243,553	A	9/1993	Flockencier	356/5
5,285,461	A *	2/1994	Krasutsky et al.	250/234
5,285,761	A	2/1994	Hancock et al.	123/634
5,898,483	A	4/1999	Flowers	356/4.01
6,115,113	A	9/2000	Flockencier	356/5.01
6,184,828	B1 *	2/2001	Shoki	342/372
6,262,800	B1	7/2001	Minor	356/139.07
6,584,382	B2	6/2003	Karem	701/3
7,336,345	B2	2/2008	Krasutsky	356/4.01
2002/0190162	A1	12/2002	McDonnell	244/170
2002/0198632	A1	12/2002	Breed et al.	701/1
2004/0012771	A1	1/2004	Ehbets	356/4.01
2005/0068517	A1 *	3/2005	Evans et al.	356/5.01
2006/0124838	A1	6/2006	Baker et al.	250/221
2006/0197013	A1	9/2006	Liebman	250/234
2006/0197936	A1	9/2006	Liebman	356/5.01
2007/0008514	A1	1/2007	Krasutsky	356/4.01
2007/0222968	A1	9/2007	Krasutsky	356/4.01
2008/0002176	A1	1/2008	Krasutsky	356/4.01

OTHER PUBLICATIONS

Dec. 18, 2007 Search Report for Serial No. PCT/US06/021339.
Feb. 24, 2006 Office Action for U.S. Appl. No. 11/177,782.
Nov. 20, 2006 Final Rejection for U.S. Appl. No. 11/177,782.
Mar. 22, 2007 Examiner's Answer to Appeal Brief for U.S. Appl. No. 11/177,782.

(Continued)

Primary Examiner — Thomas Tarcza
Assistant Examiner — Luke Ratcliffe
(74) *Attorney, Agent, or Firm* — Lee, Jorgensen, Pyle & Kewalramani, P.C.

(57) **ABSTRACT**

A LADAR system and with lookdown and loitering capabilities is disclosed. In one aspect, an apparatus includes a LADAR sensor and a gimbal. The LADAR sensor is mounted to the gimbal, which is capable of scanning in azimuth sufficient to provide a look down and loitering capability. In another aspect, a method includes flying an airborne vehicle through an environment; and scanning a LADAR signal forward and to at least one side into a field of regard.

42 Claims, 11 Drawing Sheets

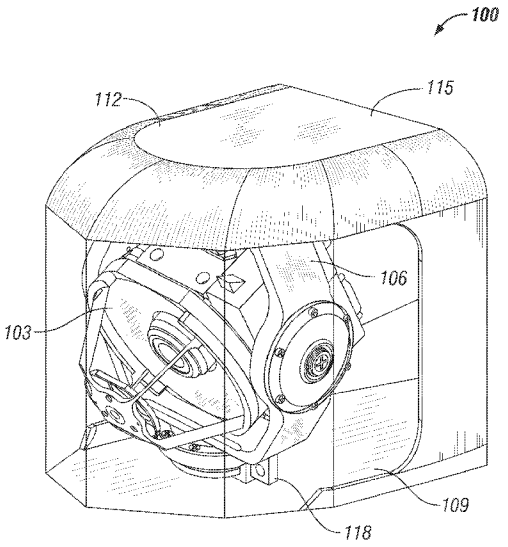

OTHER PUBLICATIONS

Jul. 17, 2007 Examiner's Answer to Appeal Brief for U.S. Appl. No. 11/177,782.
Mar. 16, 2009 Board's Decision Affirmed in Part for U.S. Appl. No. 11/177,782.
Feb. 24, 2006 Non-Final Rejection for U.S. Appl. No. 11/177,458.
Aug. 9, 2006 Election/Restriction Requirement for U.S. Appl. No. 11/177,458.
Nov. 8, 2006 Non-Final Rejection for U.S. Appl. No. 11/177,458.
May 3, 2007 Non-Final Rejection for U.S. Appl. No. 11/177,458.
Oct. 18, 2007 Final Rejection for U.S. Appl. No. 11/177,458.
Jan. 4, 2008 Non-Final Rejection for U.S. Appl. No. 11/177,458.
Jun. 25, 2008 Final Rejection for U.S. Appl. No. 11/177,458.
Sep. 29, 2008 Non-Final Rejection for U.S. Appl. No. 11/177,458.
Mar. 18, 2009 Non-Final Rejection for U.S. Appl. No. 11/177,458.
Aug. 19, 2009 Applicant Summary of Interview with Examiner for U.S. Appl. No. 11/177,458.
Dec. 11, 2006 Election/Restriction Requirement for U.S. Appl. No. 11/178,100.
Apr. 6, 2007 Non-Final Rejection for U.S. Appl. No. 11/178,100.
Oct. 3, 2007 Notice of Allowance and Fees Due for U.S. Appl. No. 11/178,100.
Issue Notification for U.S. Appl. No. 11/178,100.

* cited by examiner

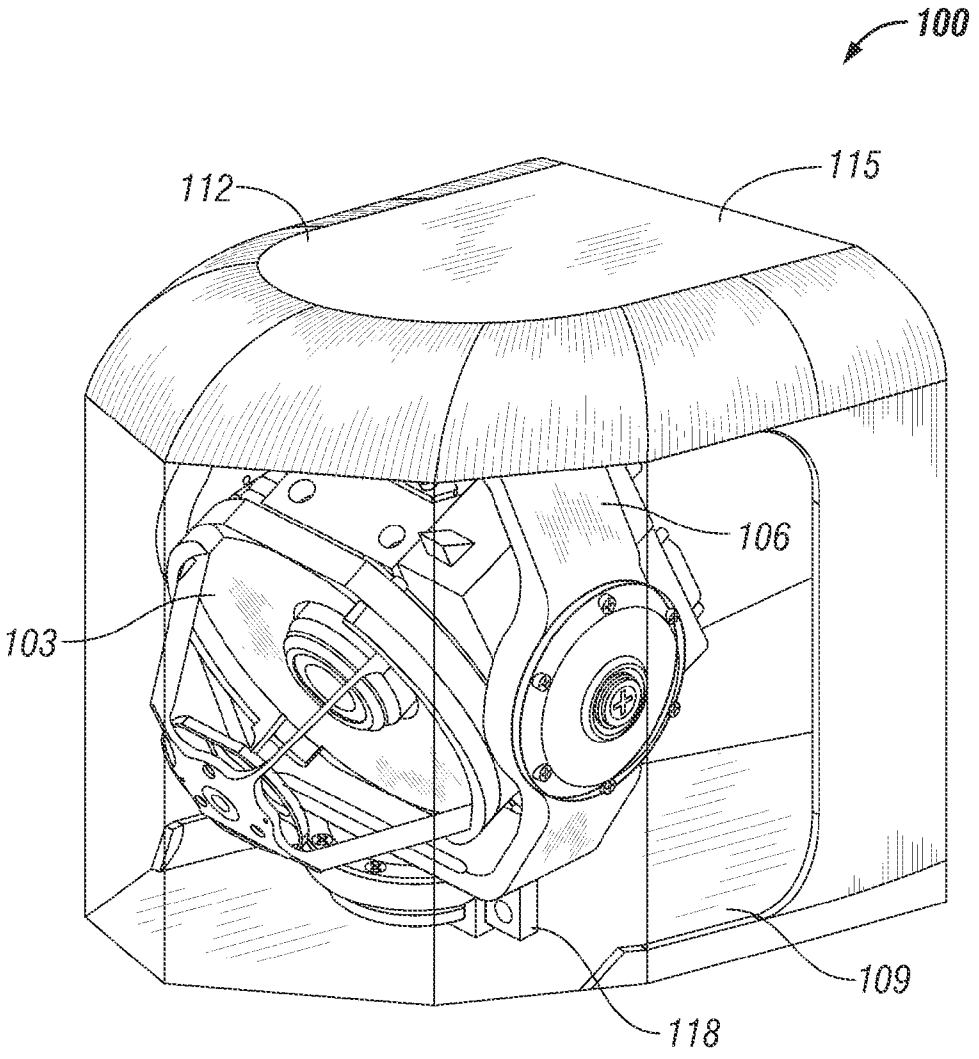

FIG. 1

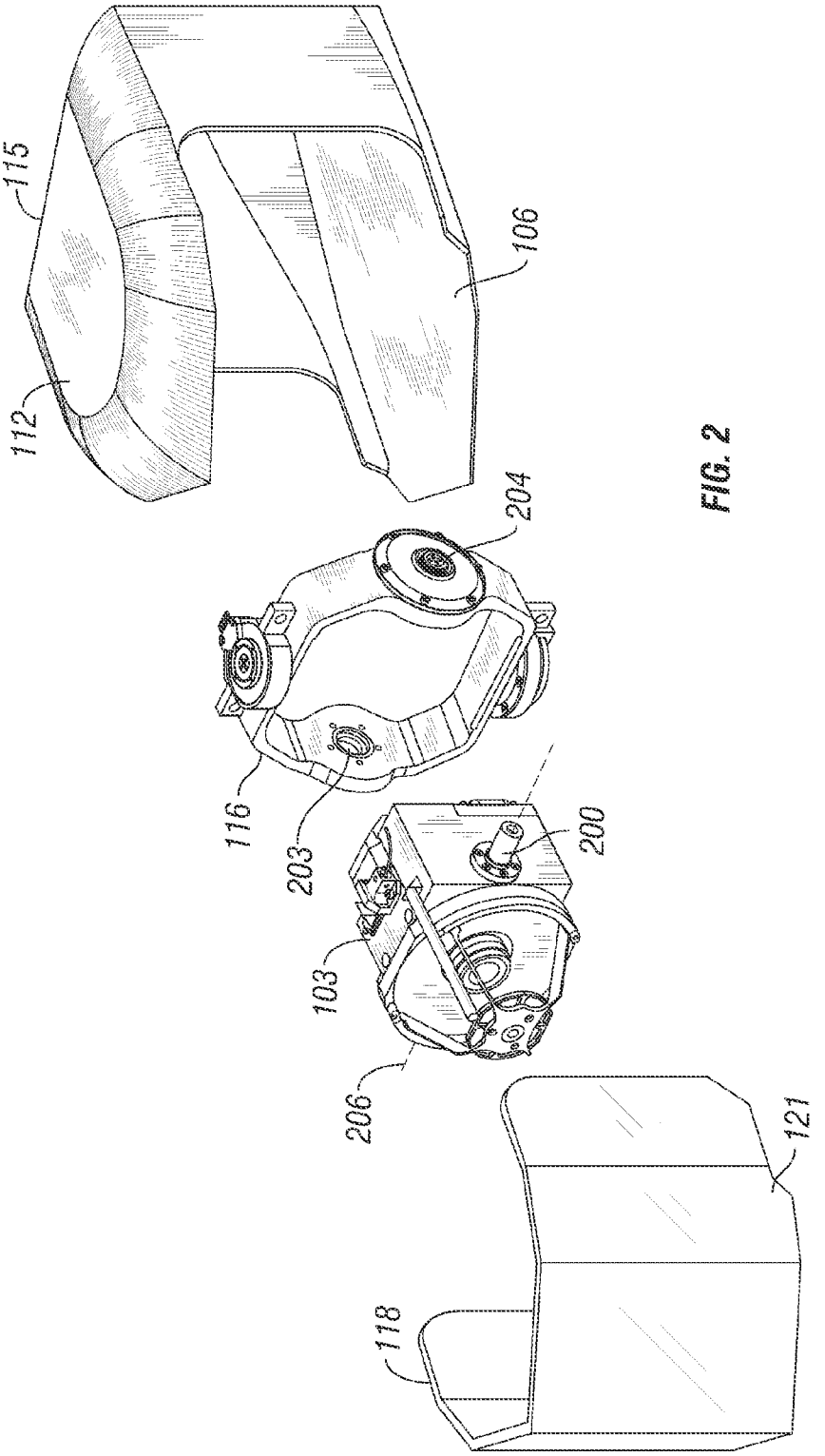

FIG. 2

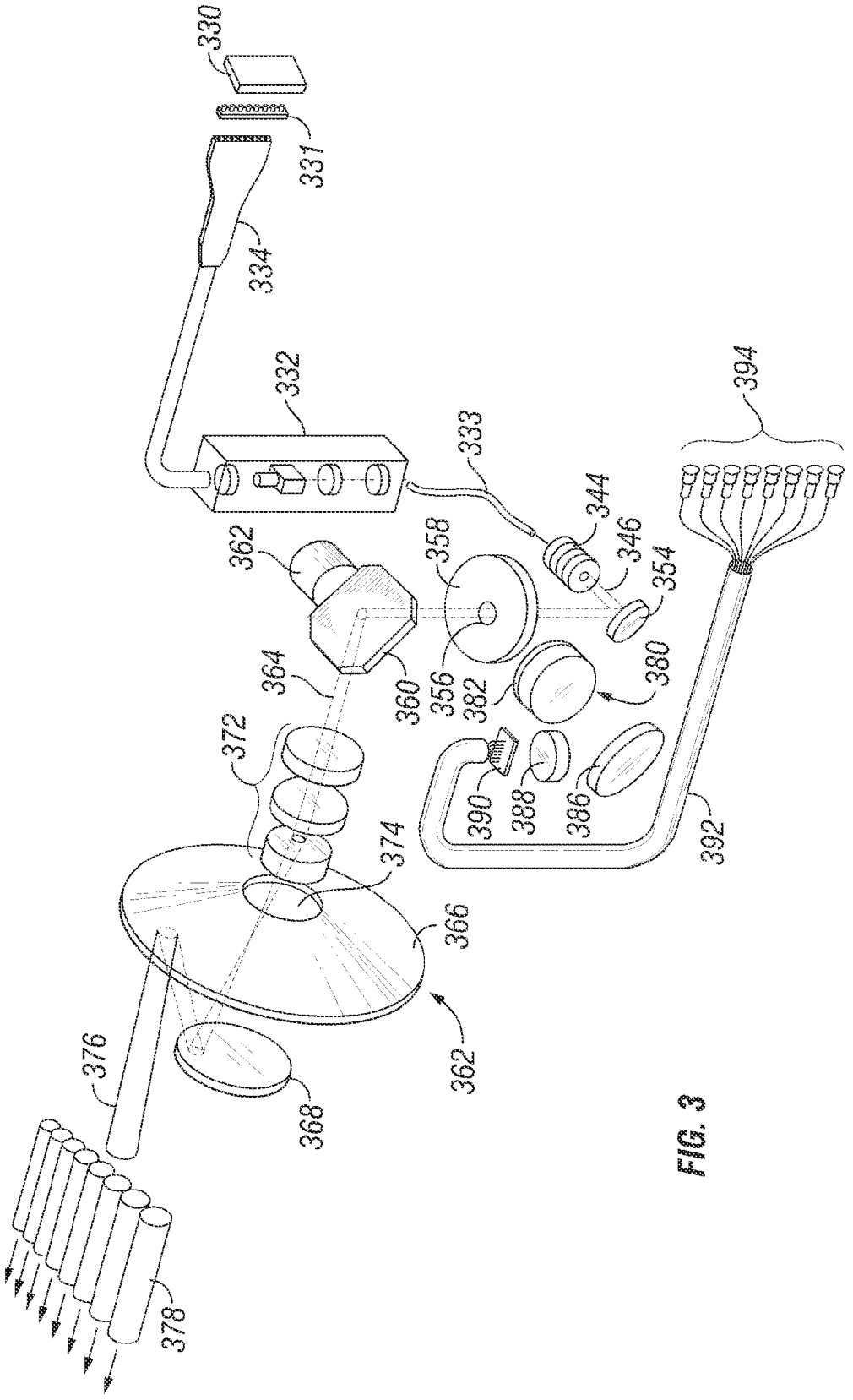
330
331
334
332
333
394
344
346
354
362
358
364
360
356
382
380
372
390
388
386
392
374
366
376
362
368
378

FIG. 3

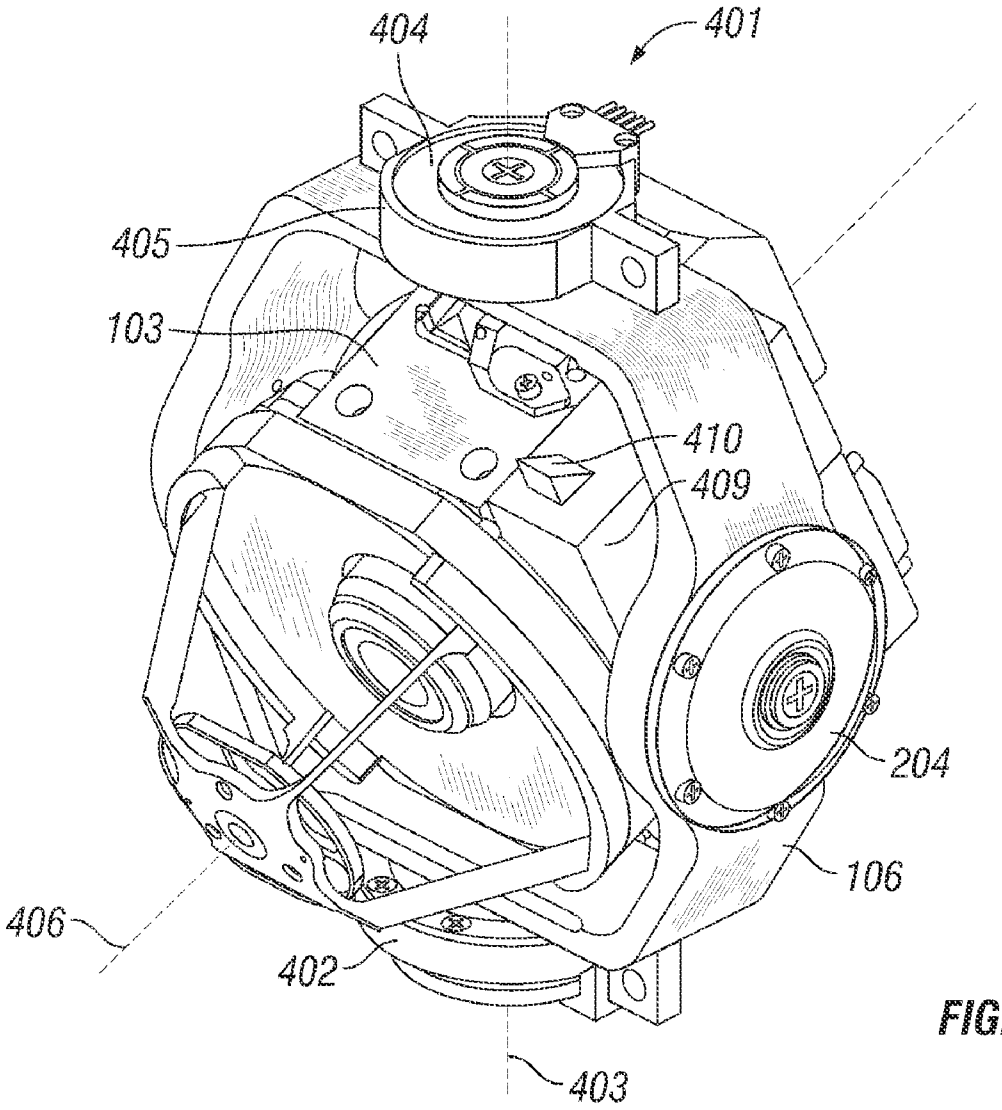

FIG. 4

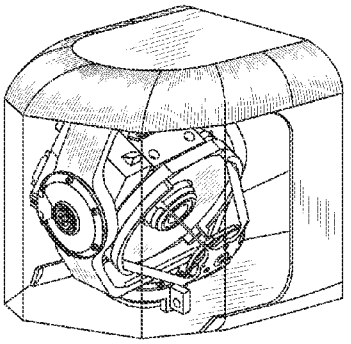

FIG. 5A

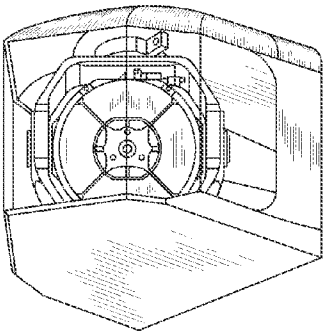

FIG. 5B

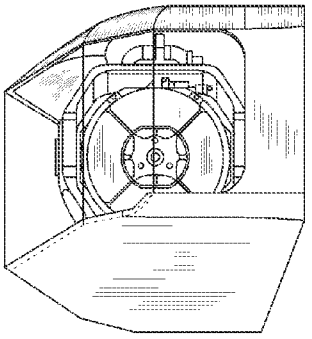

FIG. 5C

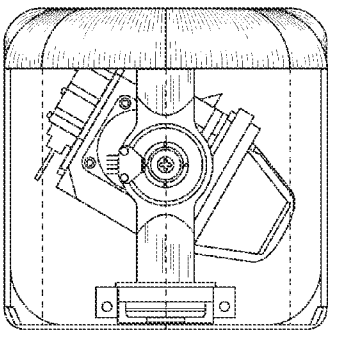

FIG. 5D

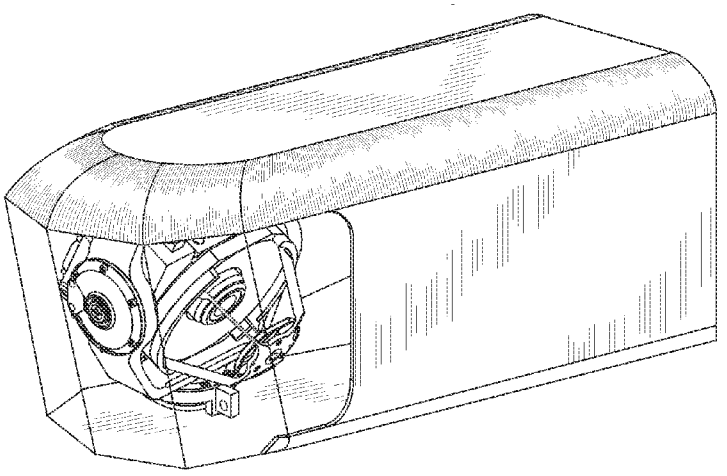

FIG. 6A

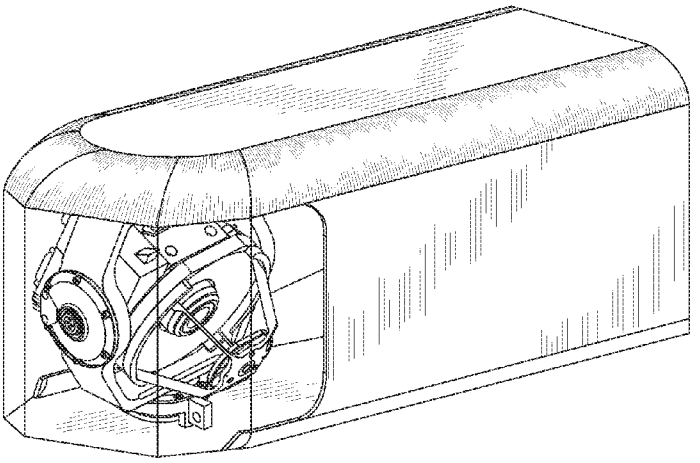

FIG. 6B

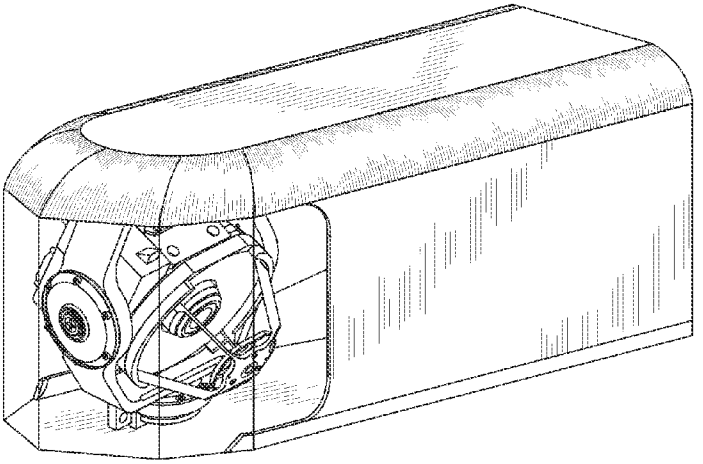

FIG. 6C

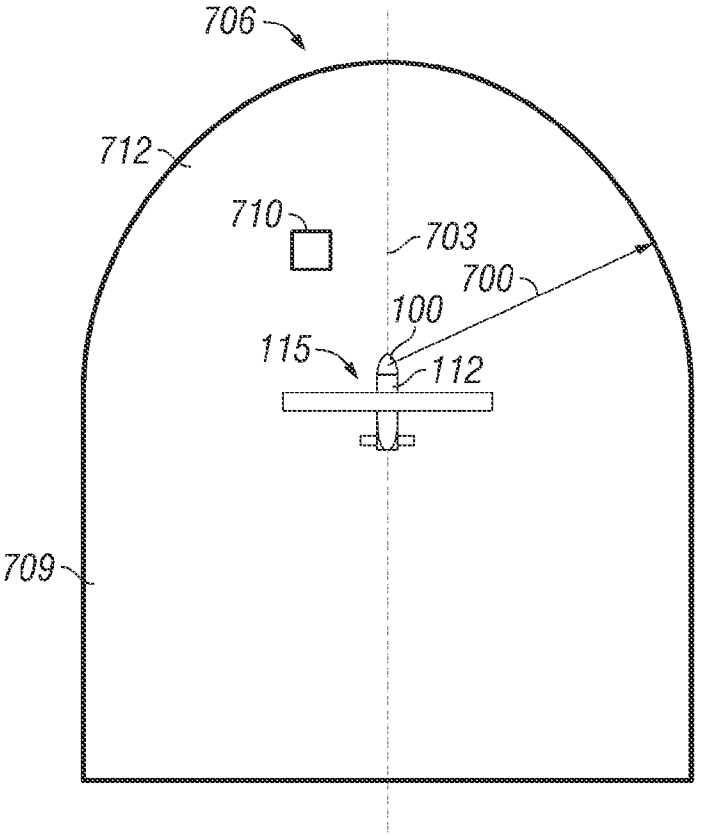
706
712
710
703
700
100
115
112
709

FIG. 7A

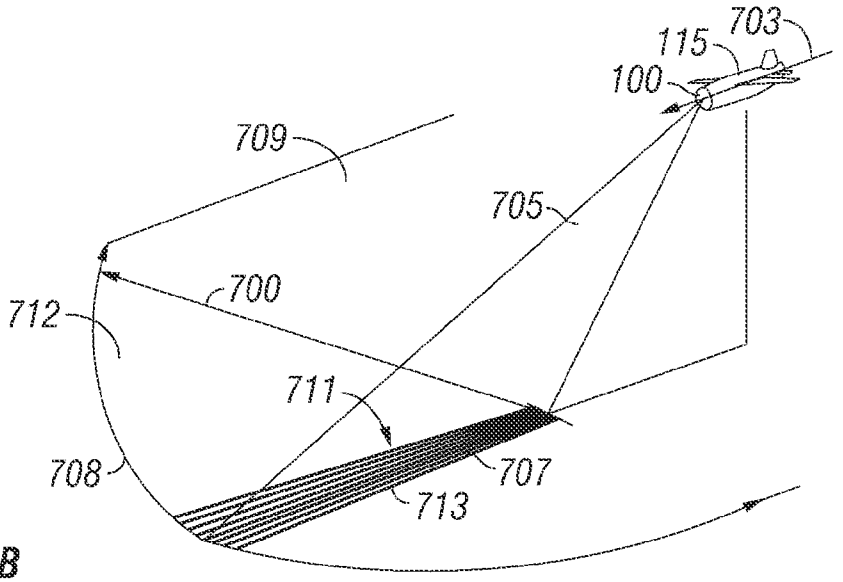
703
115
100
709
705
700
712
711
708
707
713

FIG. 7B

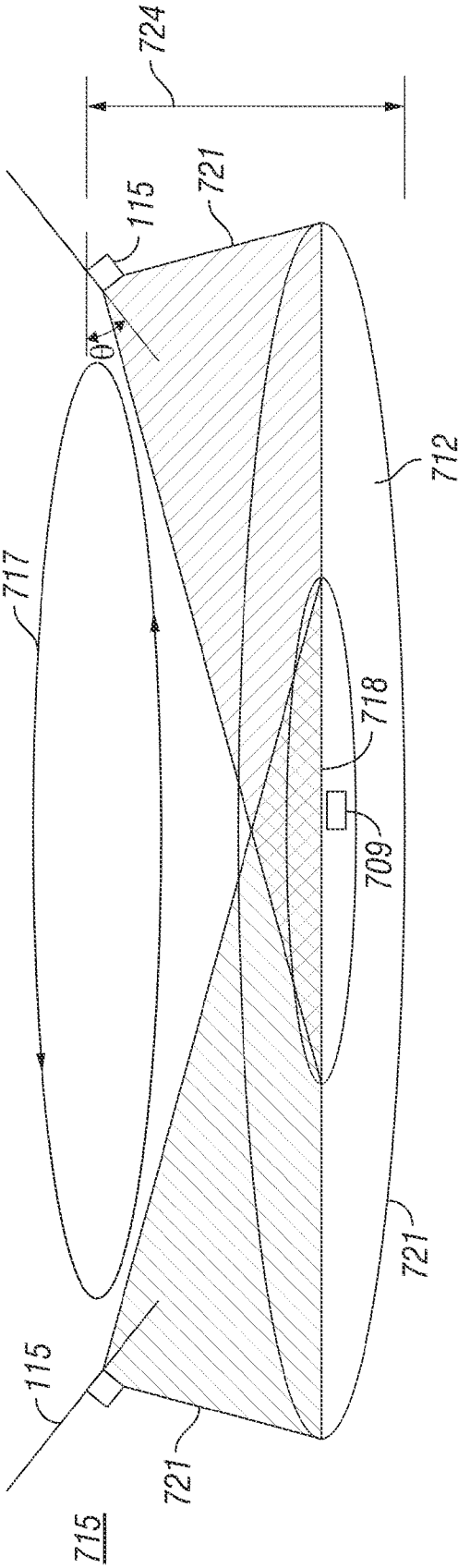

FIG. 7C

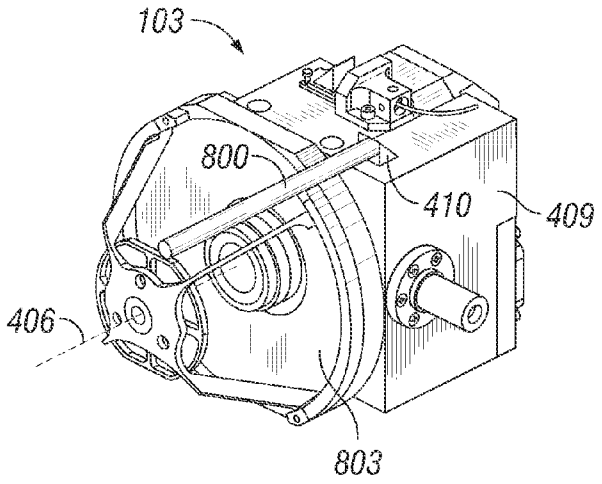

FIG. 8A

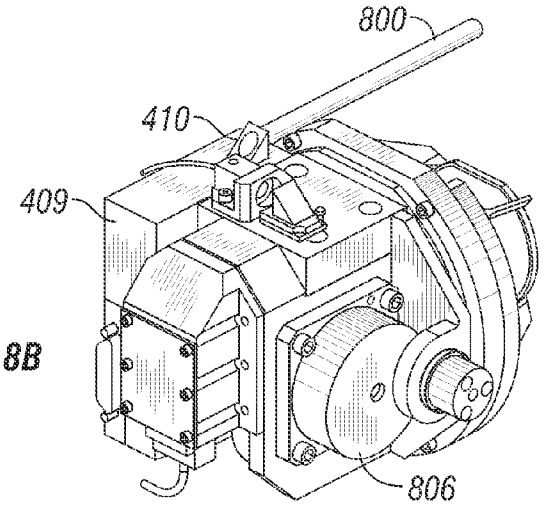

FIG. 8B

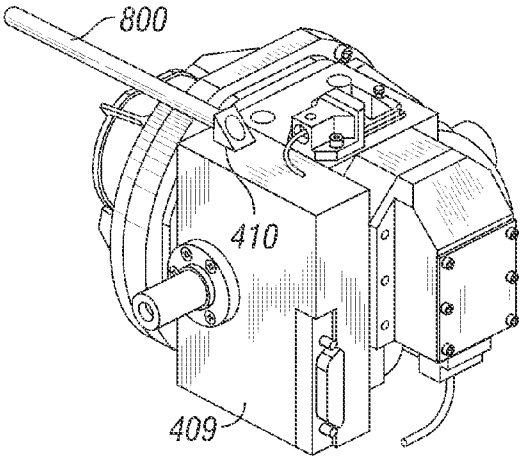

FIG. 8C

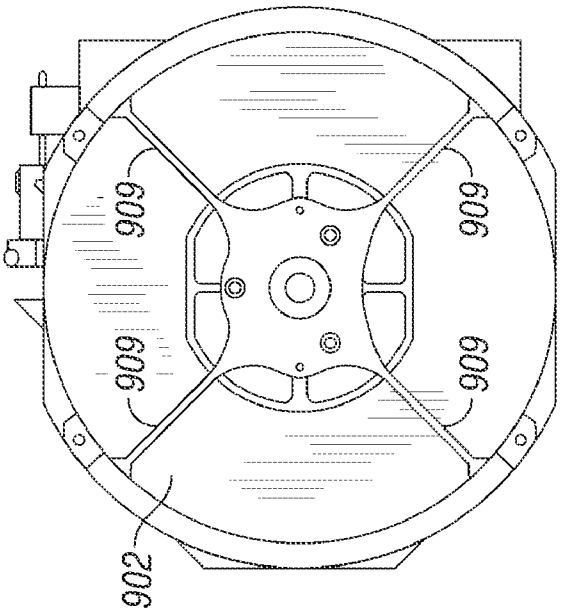

FIG.9B

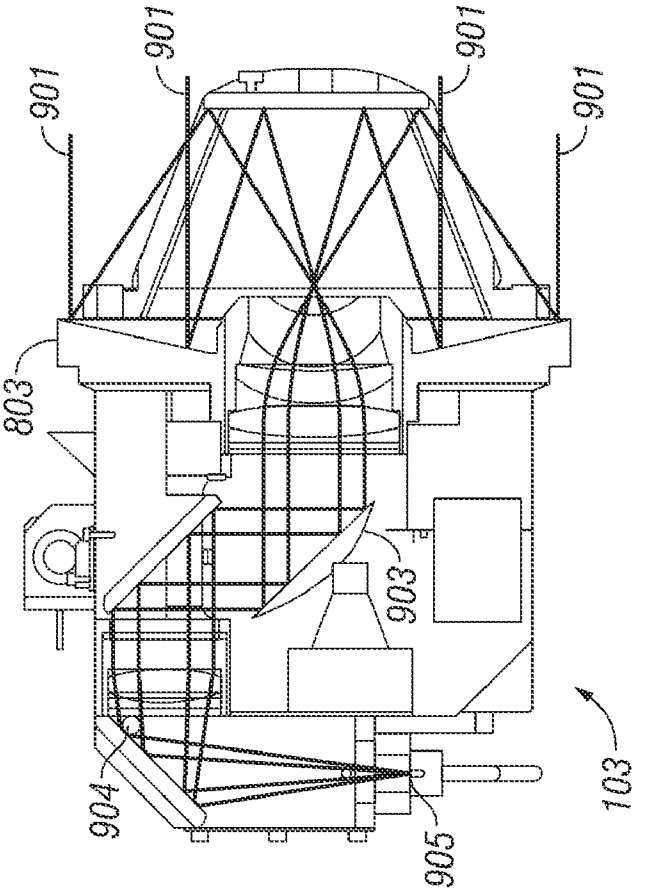

FIG. 9A

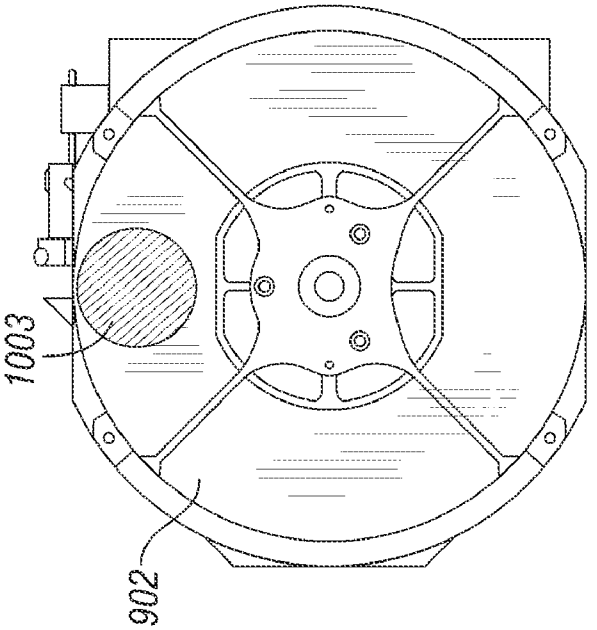

FIG. 10B

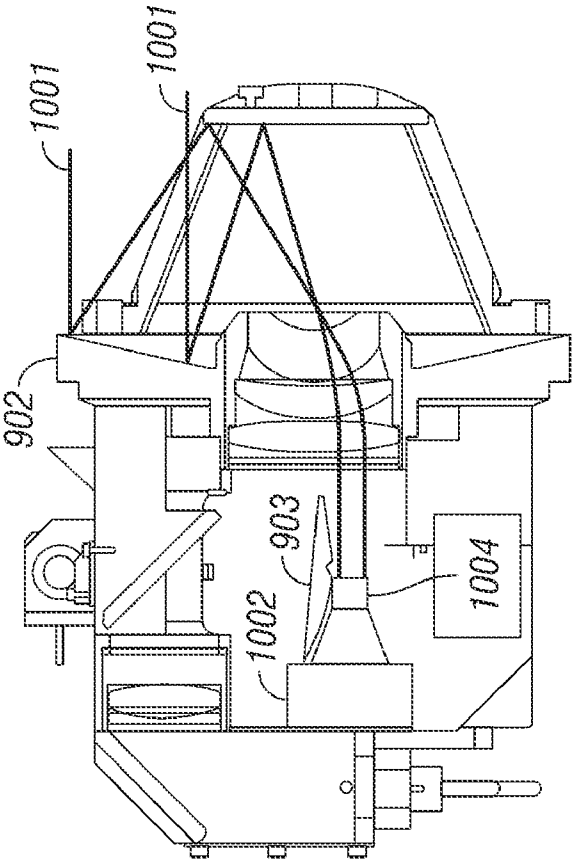

FIG. 10A

LOOKDOWN AND LOITERING LADAR SYSTEM

This is a continuation of U.S. patent application Ser. No. 11/177,782, entitled "Lookdown And Loitering Ladar System", and filed Jul. 8, 2005, in the name of the inventor Nicholas J. Krasutsky, now abandoned. The earlier effective filing date of that application is hereby claimed under 35 U.S.C. §120. That application is also hereby incorporated by reference in full and for all purposes as is if set forth verbatim herein.

BACKGROUND OF THE INVENTION

1. Field of the Invention

The present invention pertains to a laser detection and ranging ("LADAR") system and, more particularly, to a LADAR system with lookdown and loitering capabilities.

2. Description of the Related Art

A need of great importance in military and some civilian remote sensing operations is the ability to quickly detect and identify objects, frequently referred to as "targets," in a "field of regard." A common problem in military operations, for example, is to detect and identify targets, such as tanks, vehicles, guns, and similar items, which have been camouflaged or which are operating at night or in foggy weather. It is important in many instances to be able to distinguish reliably between enemy and friendly forces. As the pace of battlefield operations increases, so does the need for quick and accurate identification of potential targets as friend or foe and as a target or not.

Remote sensing techniques for identifying targets have existed for many years. For instance, in World War II, the British developed and utilized radio detection and ranging ("RADAR") systems for identifying the incoming planes of the German Luftwaffe. RADAR uses radio waves to locate objects at great distances even in bad weather or in total darkness. Sound navigation and ranging ("SONAR") has found similar utility and application in environments where signals propagate through water, as opposed to the atmosphere. While RADAR and SONAR have proven quite effective in many areas, they are inherently limited by a number of factors. For instance, RADAR is limited because of its use of radio frequency signals and the size of the resultant antennas used to transmit and receive such signals. Sonar suffers similar types of limitations. Thus, alternative technologies have been developed and deployed.

One such alternative technology is laser detection and ranging ("LADAR"). Similar to RADAR systems, which transmit and receive radio waves to and reflected from objects, LADAR systems transmit laser beams and receive reflections from targets. Because of the short wavelengths associated with laser beam transmissions, LADAR data exhibits much greater resolution than RADAR data. Typically, a LADAR system creates a three-dimensional ("3-D") image in which each datum, or "pixel", comprises an (x,y) coordinate and associated range for the point of reflection.

LADAR systems used for small missile applications are generally mounted at the front of the missile to maximize the collection area for the receiver while maintaining the missile cross section. These LADAR systems use an optical dome which limits the field of regard ("FOR"). Some of these LADARs use a strap-down, staring configuration. In others, gimbals are used to provide stabilization, scan the LADAR transmit beam, and increase the sensor FOR. Traditional gimbal configurations place the gimbal supports along the side of the missile body, using the outer support for elevation and the inner ring for azimuthal motion. Such an arrangement is described in, for example:

(i) U.S. Pat. No. 5,200,606, entitled "Laser Radar Scanning System," on Apr. 6, 1993, to LTV Missiles and Electronics Group as assignee of the inventors Nicholas J. Krasutsky et al.;

(ii) U.S. Pat. No. 5,224,109, entitled "Laser Radar Transceiver," on Apr. Jun. 29, 1993, to LTV Missiles and Electronics Group as assignee of the inventors Nicholas J. Krasutsky et al.; and

(iii) U.S. Pat. No. 5,285,461, entitled "Improved Laser Radar Transceiver," on Feb. 8, 1994, to Loral Vought Systems Corporation as assignee of the inventors Nicholas J. Krasutsky et al.

Each of these patents is now commonly assigned herewith.

Some gimbaling arrangements where the outer gimbal provides the azimuthal motion have been used in belly-mounted configurations. However, this is not compatible with a missile attack scenario and greatly limits the conditions under which the missile can be launched. As LADAR systems and missile weapons systems become more sophisticated, this mission scenario is becoming more common.

Furthermore, providing missiles with designator capabilities has also proved problematic because, unless the missile can loiter and keep the designator beam on target, the time available for designation is very limited. With a front mounted sensor and a gimbal with a limited FOR, the missile can designate as it is flying toward the target. The designator loses sight of the target as the missile passes over it and the missile must turn around to begin designation again. This intermittent designation time is incompatible with the normal operation of a designator which must keep the beam in the target so the attacking missile can track on it.

The present invention is directed to resolving, or at least reducing, one or all of the problems mentioned above.

SUMMARY OF THE INVENTION

The present invention includes, in its various aspects and embodiments, a laser detection and ranging ("LADAR") system and with lookdown and loitering capabilities. In one aspect, the invention includes an apparatus comprising a LADAR sensor and a gimbal. The LADAR sensor is mounted to the gimbal, which is capable of scanning in azimuth sufficient to provide a look down and loitering capability. In another aspect, the invention includes a method comprising flying an airborne vehicle through an environment; and scanning a LADAR signal forward and to at least one side into a field of regard.

BRIEF DESCRIPTION OF THE DRAWINGS

The invention may be understood by reference to the following description taken in conjunction with the accompanying drawings, in which like reference numerals identify like elements, and in which:

FIG. **1** illustrates a LADAR system in one particular embodiment constructed and operated in accordance with the present invention in an assembled view;

FIG. **2** illustrates the LADAR system of FIG. **1** in an exploded view;

FIG. **3** is an exploded view of several components of an optical train of one particular embodiment of the sensor in the LADAR system of FIG. **1**-FIG. **2**;

FIG. **4** shows LADAR sensor of FIG. **1**-FIG. **2**, which is alternative to that shown in FIG. **3** mounted to the gimbal ring;

FIG. **5**A-FIG. **5**D show several views of the LADAR system of FIG. **1**-FIG. **2** positioned at various angles in azimuth and elevation;

FIG. **6**A-FIG. **6**C illustrate alternative embodiments for the window of the LADAR system of FIG. **1**-FIG. **2**;

FIG. **7**A-FIG. **7**C depict the LADAR system of FIG. **1**-FIG. **2** in operation in a lookdown and loitering scenario;

FIG. **8**A-FIG. **8**D illustrate an on-gimbal laser designator, first shown in FIG. **4**, from different perspectives;

FIG. **9**A-FIG. **9**B illustrate in a cross section and a plan view, respectively, the sensor of FIG. **1** with a scan mirror in the LADAR position for LADAR operations; and

FIG. **10**A-FIG. **10**B illustrate in a cross section and a plan view, respectively, the sensor of FIG. **1** with the scan mirror in the SAL position for SAL operations.

While the invention is susceptible to various modifications and alternative forms, the drawings illustrate specific embodiments herein described in detail by way of example. It should be understood, however, that the description herein of specific embodiments is not intended to limit the invention to the particular forms disclosed, but on the contrary, the intention is to cover all modifications, equivalents, and alternatives falling within the spirit and scope of the invention as defined by the appended claims.

DETAILED DESCRIPTION OF THE INVENTION

Illustrative embodiments of the invention are described below. In the interest of clarity, not all features of an actual implementation are described in this specification. It will of course be appreciated that in the development of any such actual embodiment, numerous implementation-specific decisions must be made to achieve the developers' specific goals, such as compliance with system-related and business-related constraints, which will vary from one implementation to another. Moreover, it will be appreciated that such a development effort, even if complex and time-consuming, would be a routine undertaking for those of ordinary skill in the art having the benefit of this disclosure.

This present invention comprises a LADAR gimbaling and windowing technique that allows LADAR systems to be used in loitering aerial platforms, although the invention is not so limited. The gimbal and window arrangement described herein allows the LADAR system to be mounted in the front of an aerial platform and used over azimuth angles exceeding ±90°. This capability allows the LADAR system to be used to both track and accurately designate targets continuously while the missile moves above in a circular loitering pattern. This capability is provided by reversing the gimbal axes, using window arrangements that cover a very wide azimuth angle and designing the sensor head and gimbal to move freely through wide angles without hitting the windows or the sides of the missile. This arrangement also facilitates the use of laser designators in conjunction with the LADAR so that designation can be performed on moving targets while the missile loiters above the target area.

A large mode area fiber was used to move the transmitter output to the gimbal. This frees the laser from the size and weight constraints associated with being located on the gimbal and facilitates the placing of the designator on the gimbal. The designator laser outputs much larger pulses than the laser used for the LADAR so it was placed on the gimbal rather than also being fiber coupled to the sensor head. This arrangement is the preferred embodiment but fiber coupling both the LADAR and designator lasers as well as putting the LADAR laser on the gimbal is considered to be covered by this disclosure.

FIG. **1** and FIG. **2** illustrate a LADAR system **100** in one particular embodiment constructed and operated in accordance with the present invention in assembled and exploded views, respectively. In general, the LADAR system **100** includes a sensor **103** mounted in a gimbal ring **106**. The assembled sensor **103** and gimbal ring **106** are housed in a chamber **109**, as shown in FIG. **1**, defined by a forward end **112** of a platform **115**. In the illustrated embodiment, the platform **115** is an aerial vehicle, and more particularly a missile or an airborne guided submunition, but this is not necessary to the practice of the invention.

The platform **115** includes a faceted window **118** that closes the chamber **109**, as will be discussed further below. The faceted window **118** provides a wide Field of Regard ("FOR"). It also protects the sensor **103** and gimbal ring **106** from environmental conditions and, in this particular embodiment, aerodynamic forces. The faceted window **118** also contributes to the aerodynamic performance of the platform **115** as a whole, as will be recognized by those skilled in the art having the benefit of this disclosure. Note that the fuselage of the forward end **112** is shaped to match the faceting of the window **118**. This also is not necessary to the practice of the invention, but enhances the aerodynamic performance of the platform **115** in this particular embodiment.

The sensor **103** may be any suitable LADAR sensor known to the art. Suitable LADAR sensors are disclosed in the aforementioned patents—namely:

(i) U.S. Pat. No. 5,200,606, entitled "Laser Radar Scanning System," on Apr. 6, 1993, to LTV Missiles and Electronics Group as assignee of the inventors Nicholas J. Krasutsky et al. ("the '606 patent);

(ii) U.S. Pat. No. 5,224,109, entitled "Laser Radar Transceiver," on Apr. Jun. 29, 1993, to LTV Missiles and Electronics Group as assignee of the inventors Nicholas J. Krasutsky et al. (the '109 patent); and

(iii) U.S. Pat. No. 5,285,461, entitled "Improved Laser Radar Transceiver," on Feb. 8, 1994, to Loral Vought Systems Corporation as assignee of the inventors Nicholas J. Krasutsky et al.

Applicant hereby incorporates by reference for all purposes those portions of the cited patents disclosing the composition and operation of the sensor as if set forth verbatim herein. Note that the sensors of the cited patents are gimbaled in accordance with what is now conventional practice. Applicant does not incorporate by reference those portions of the cited patents addressing the gimbaling of the sensors.

For the sake of clarity and to further an understanding of the present invention, a portion of '606 patent describing the optics of the sensor therein is reproduced below somewhat modified. Turning now to FIG. **3**, selected portions of the optics **300** of that sensor are shown in an exploded view. A gallium aluminum arsenide ("GaAlAs") laser **330** pumps a solid state laser **332**. The solid state laser **332** emits the laser light energy employed for illuminating the target. The GaAlAs pumping laser **330** produces a continuous signal of wavelengths suitable for pumping the solid state laser **332**, e.g., in the crystal absorption bandwidth. Pumping laser **330** has an output power, suitably in the 10-20 watt range, sufficient to actuate the solid state laser **332**.

The pumping laser **330** and the solid state laser **332** are fixedly mounted on the housing of the forward end **112**. The output of the solid state laser **332** is transported to the gimbal by means of a high power optical fiber **333**. Since the solid state laser **332** is fiber-coupled to the gimbal, many laser types can be used, e.g., side pumped lasers and fiber lasers, provided they can be coupled into the fiber. In the case of fiber lasers it is also possible to use the lasing fiber directly to

connect to the sensor head. Thus, alternative embodiments may use lasers other than solid state lasers. Output signals from the high power optical fiber **333** are transmitted through a beam input lens **331** and a fiber optic bundle **334**. The fiber optic bundle **334** has sufficient flexibility to permit scanning movement of the LADAR system **100** during operation as described below.

Still referring to FIG. **3**, the solid state laser **332** is suitably a Neodymium ("Nd") doped yttrium aluminum garnet ("YAG"), a yttrium lithium fluoride ("YLF"), or a Nd:YVO_4 laser. The solid state laser **332** is operable to produce, in this particular embodiment, pulses with widths of 10 to 20 nanoseconds, peak power levels of approximately 10 kilowatts, at repetition rates of 10-120 kHz. The equivalent average power is in the range of 1 to 4 watts. The preferred range of wavelengths of the output radiation is in the near infrared range, e.g., 1.047 or 1.064 microns.

The output generated by solid state laser **332**, in the present embodiment, is carried to the gimbaled head by the high power fiber **333**, as mentioned above. The high power fiber **333** has sufficient flexibility to permit scanning movement of the LADAR system **100** during operation as described below. The output end of the high power fiber **333** is mounted on the gimbaled head so that the laser beam emerging from it passes through the beam expander **340**. The beam expander **340** comprises a series of (negative and positive) lenses which are adapted to expand the diameter of the beam to provide an expanded beam **342**, suitably by an 8:1 ratio, while decreasing the divergence of the beam.

The expanded beam **342** is next passed through a beam segmenter **344** for dividing the beam into a plurality of beam segments **346** arrayed on a common plane, initially overlapping, and diverging in a fan shaped array. The divergence of the segmented beams **346** is not so great as to produce separation of the beams within the LADAR system **100**, but preferably is sufficiently great to provide a small degree of separation at the target, as the fan-shaped beam array is scanned back and forth over the target (as will be described below with reference to output beam segments **348**). Beam segmentation can be accomplished by using a series of calcite wedges, a holographic diffraction grating or a phased diffraction grating. The preferred method is using a phased diffraction grating because of its predictable performance and power handling capability.

As shown in FIG. **3**, the resultant segmented beams **346** are then reflected from a third turning mirror **354**, passed through an aperture **356** of an apertured mirror **358**, and subsequently reflected from a scanning mirror **360** in a forward direction relative to the platform **115**. The aperture **356** is located off the center of the aperture mirror **358**. The scanning mirror **360** is pivotally driven by a scanning drive motor **362**, which is operable to cyclically scan the beam segments **346** for scanning the target area. In a preferred embodiment, the beam segments **346** are preferably scanned at a rate of approximately 100 Hz. The turning axis of the scanning drive motor **362** is aligned in parallel with the segmenter **344** axis whereby the resultant beam array **346** is scanned perpendicularly to the plane in which the beams are aligned.

An afocal, Cassegrainian telescope **362** is provided for further expanding an emitted beam **364** and reducing its divergence. The telescope **362** includes a forward-facing primary mirror **366** and a rear-facing secondary mirror **368**. A lens structure **372** is mounted in coaxial alignment between the primary mirror **366** and the scanning mirror **360**, and an aperture **374** is formed centrally through the primary mirror in alignment with the lens structure.

The transmitted beams which are reflected from the scanning mirror are directed through the lens structure **372** for beam shaping, subsequently directed through the aperture **374** formed centrally through the primary mirror, and subsequently reflected from the secondary mirror **368** spaced forwardly of the primary mirror and is then reflected from the front surface of the primary mirror **366**. The resultant transmitted beam **376**, is a fan shaped array which is scanned about an axis parallel to its plane. The beam array **378** illustrates the diverged spacing of the beam segments as they reach the target, wherein the beams are in side-by-side orientation, mutually spaced by a center-to-center distance of twice their diameters.

The telescope **362** receives laser energy reflected from a target that has been illuminated by the array of transmitted beams. This received energy is then reflected successively through the primary mirror **366** and the secondary mirror **368**, the lens assembly **372**, and the scanning mirror **360**, toward the apertured mirror **358**. Because the reflected beam is of substantially larger cross-sectional area than the transmitted beam, it is incident upon the entire reflecting surface of the apertured mirror **358**, and substantially all of its energy is thus reflected laterally by the apertured mirror **358** toward collection optics **380**.

The collection optics **380** includes a narrow band filter **382**, for filtering out wavelengths of light above and below a desired laser wavelength to reduce background interference from ambient light. The beam then passes through condensing optics **384** to focus the beam. The beam next strikes a fourth turning mirror **86** toward a focusing lens structure **388** adopted to focus the beam upon the receiving ends **390** of a light collection fiber optic bundle **392**. The opposite ends of each optical fiber **392** are connected to illuminate a set of diodes **394** in a detector array, whereby the laser light signals are converted to electrical signals which are conducted to a processing and control circuit (not shown).

The fiber optic bundle **392** preferably includes nine fibers **393** (only one indicated), eight of which are used for respectively receiving laser light corresponding to respective transmitted beam segments and one of which views scattered light from the transmitted pulse to provide a timing start pulse. Accordingly, the input ends **390** of the fibers **392** are mounted in linear alignment along an axis which is perpendicular to the optical axis. The respective voltage outputs of the detectors **394** thus correspond to the intensity of the laser radiation reflected from mutually parallel linear segments of the target area which is parallel to the direction of scan.

However, the invention admits wide variation in the implementation of the sensor **103**. FIG. **4** shows an alternative LADAR sensor **103** mounted to the gimbal ring **106**. As is best shown in FIG. **2**, the sensor **103** includes a pair of trunions **200** (only one shown) that are rotatably mounted within a pair of bores **203** (only one shown) in the gimbal ring **106**. The bores **203** include mechanical assemblies such as bearings, bushing, etc. (not shown) to facilitate rotation of the trunions **200** in the bores **203** in a manner known to the art. The LADAR sensor **103** is a variant of the sensor described in the '109 patent referenced above and employs an optical train similar to that described above relative to FIG. **3**. A servo-drive motor **204** drives the sensor **103** through the trunions **200** to scan the sensor in elevation. In the illustrated embodiment, the sensor **103** is scanned in elevation approximately ±30° relative to the axis **206** defined by the trunions **200** and shown in FIG. **2** in broken lines. However, the amount of elevational scan is implementation specific and may differ in alternative embodiments.

Returning to FIG. **4**, the sensor **103** is mounted through the gimbal ring **106** from the top **401** and bottom **402** so that extended travel and scanning in azimuth is possible. Note that "top" and "bottom" are defined relative to the nominal orientation of the platform **115** relative to the Earth's field of gravity or the ground surface. As the platform **115** changes this orientation, so, too, will the orientation of the "top" **401** and "bottom" **402** relative to these references. The sensor **103** is mounted through the gimbal ring **106** using a trunion/bore approach and bearing/bushing approach similar to that described immediately above and as is conventional in the art. The sensor **103** and gimbal ring **106** are driven in azimuth by servo-motor **405** about an axis **403** shown in FIG. **4** in broken lines. The sensor **103** is driven in elevation by the servo motor **204** about an axis **206** shown in FIG. **2** in broken lines.

The position of the gimbal in elevation and azimuth is measured by position sensing devices located on the opposite sides of the gimbal ring across from each of the servomotors **204** and **402**. The azimuthal position sensor **401** is shown in FIG. **4** along with the corresponding azimuthal gimbal servo-motor **405**. Position can be sensed by a number of devices including potentiometers, electrical encoders and optical encoders, or other techniques known to the art, with the preferred method being optical encoders.

In the illustrated embodiment, the gimbaled sensor **103** is capable of scanning in azimuth substantially past 180°. In the illustrated embodiment, the goal is a full 210° scan and the term "substantially" is a recognition that sometimes manufacturing variances or tolerances or sometimes operational conditions impair achievement of a full 210° azimuthal scan. The illustrated embodiment achieves the 210° scan by scanning ±105° from the boresight **406**, or longitudinal axis of the platform **115**, shown in broken lines in FIG. **4**.

However, this is not necessary to the practice of the invention in all embodiments. One intended purpose of the present invention is application in a lookdown and loitering mode, as is discussed further below relative to FIG. **7**A-FIG. **7**C. Thus, all that is required is that the gimbaled receiver **103** be able to scan sufficiently far in azimuth to one side of the platform **115** so as to enable this functionality. An embodiment capable of scanning a full 210° by scanning ±105° off boresight is more versatile. However, this functionality can be achieved by scanning off to only one side 90° off boresight. In general, any given embodiment should be able to scan at least 90° off boresight to at least one side of the platform **115**.

Referring again to FIG. **3**, in the illustrated embodiment, the LADAR transmitter has been moved off the gimbal and its output is coupled to the sensor head **103** by means of an optical fiber **333**. This simplifies the packaging of the sensor **103**. Off-gimbal laser configurations have been used in gimbaled systems in the past but they generally used complicated mirror configurations to maintain alignment between the transmit and receive paths. Recent developments in Large Mode Area ("LMA") optical fibers have allowed high peak powers to be transmitted while maintaining good beam optical quality. These fibers can emit directly as part of a fiber laser or amplifier, alternatively, they can be used to transmit the output from any laser up to the gimbaled platform.

Returning to FIG. **1**-FIG. **2**, the sensor head **103** and gimbal ring **106** are sized to fit within the chamber **109** defined by the platform **115** as the sensor **103** is scanned. Several views of the LADAR system **100**, positioned at various angles, are shown in FIG. **5**A-FIG. **5**D. More particularly, using the intersection of the boresight **406**, shown in FIG. **4**, and the axis **206**, shown in FIG. **2**, as the origin, FIG. **5**A-FIG. **5**B show the sensor **103** positioned at 55° azimuth, −30° elevation in perspective and front, plan views, respectively. FIG. **5**C shows the sensor **103** positioned at 90° azimuth, −30° elevation in a side, perspective view. FIG. **5**D shows the sensor **103** positioned at 90° azimuth, −13° elevation in a side, plan view.

Returning to FIG. **1**-FIG. **2** again, the flat window segments **121** (six of which are shown in FIG. **2**, but only one of which is indicated) of the faceted window **118** provide a wide FOR. The window segments **121** are fabricated from a material that transmits the LADAR signal but can also withstand applicable environmental conditions. In the illustrated embodiment, one important environmental condition is aerodynamic heating due to the velocity of the platform **115**. Another important environmental condition for the illustrated embodiment is abrasion, such as that caused by dust or sand impacting the window **118** at a high velocity. Thus, for the illustrated embodiment, BK-7 glass is a highly desirable material, but alternative embodiments may employ fused silica. ZnSe, Al_2O_3, Ge, and Pyrex.

Using the flat window segments **121** rather than a spherical dome (not shown) also reduces the cost of the window **118**, allows wide azimuth angles, and allows more freedom in the placement of the gimbal trunions **200**. There is no significant degradation on image quality provided the window facets **121** do not have any wedge angle between their surfaces. However, the faceted window **118** increases the overall length of the front end **112**, has more aerodynamic drag and flow asymmetry, and requires seams. It also has the potential for reflection losses if the output beam meets any window surface at near grazing incidence.

The specific window arrangement chosen depends on trades specific to the missile and its mission but some representative arrangements are shown in FIG. **6**A-FIG. **6**C. These show arrangements using different numbers of facets and different angles between the facets. They were picked because they have significantly different overall length and drag characteristics e.g. FIG. **6**A has the shortest overall length but also has the most aerodynamic drag. All arrangements utilize a small number of facets and each facet is supported at the top and bottom by the airframe structure. As the number of facets is increased, a low drag aerodynamic shape can be approximated but this requires a large number of facets and a complicated support structure, adding significantly to the cost. Such shapes may be required for high speed or for very long range applications.

Note, however, that the faceted window **118** is not necessary to the practice of the invention in all embodiments. Alternative embodiments may instead employ, for instance, a single conventional, spherical hypersphere (not shown) or spherical segments (also not shown) if the aerodynamic requirements for a given application are sufficiently important. Alternatively, one compromise uses a spherical segment in front and one or two others out at right angles to the missile axis. If tone one side is domed, loitering must be down in the direction that places that segment towards the ground. Thus, the window **118** may also be spherical or spherically segmented in alternative embodiments.

The LADAR system **100** will also include electronic circuitry (not shown) for generating the scan signals that drive the servo-motors, laser, detectors, and scanning drive motor and to capture the information in the detected signals. Scan signal generation can be performed by first using the scanning drive motor **362** to drive the scan mirror **360** in elevation. This produces multiple rows of pulses as shown in FIG. **7**B. Scanning the entire sensor in azimuth using the servo motor **405**, shown in FIG. **4**, then produces a scan of the target area. Suitable information capture and processing techniques are disclosed in:

(i) U.S. Pat. No. 6,115,113, entitled "Method for Increasing Single-Pulse Range Resolution," on Sep. 5, 2000, to Lockheed Martin Corporation as assignee of the inventor Stuart W. Flockencier;

(ii) U.S. Pat. No. 5,243,553, entitled "Gate Array Pulse Capture Device," on Sep. 7, 1993, to Loral Vought Systems Corporation as assignee of the inventor Stuart W. Flockencier.

Both of these patents are commonly assigned herewith. Note, however, that any suitable technique known to the art may be employed.

The electronic circuitry and detection electronics are fixedly mounted relative to the housing or other suitable supporting structure aboard the platform **115**. The scanning and azimuth translations of the LADAR system **100** therefore do not affect corresponding movement of the detection system. Accordingly, the mass of the components which are translated during scanning is substantially lower than would be the case if all components were gimbal-mounted. These benefits are amplified in the case of the embodiment shown in FIG. **3** since the laser is also off-gimbal.

Since the LADAR system **100** is capable of looking out at over ±90° to both sides of the platform **115**, it can be used over a wide swath as the platform **115** moves through its environment. Consider FIG. **7**A, which shows the potential for target examination out to the range **700** of the LADAR system **100** on both sides of the flight path **703**, shown in broken lines. The surveillance area **706** includes the area **709** that has already been reconnoitered and the area **712** currently under surveillance. The area **712** currently under surveillance is determined by the position of the platform **115**, the range **700** of the LADAR system **100**, and the extent of the azimuthal scan of the LADAR system **100**.

The operation of one the gimbaled LADAR sensor **100** in scanning is conceptually illustrated in FIG. **7**B. The gimbaled LADAR sensor **100** transmits the LADAR signal **705** to scan the area **712**. Each scan is generated by scanning elevationally, or vertically, several times while scanning azimuthally, or horizontally, once within the FOR. FIG. **7**B illustrates a single elevational scan **707** during the azimuthal scan **708**. Thus, each scan is defined by a plurality of elevational scans such as the elevational scan **707** and the azimuthal scan **708**. The velocity, depression angle of the sensor **103** with respect to the horizon, and total azimuth scan angle of the LADAR platform **115** determine the extent of the scan.

The LADAR signal **705** is typically a pulsed signal and may be either a single beam or a split beam. Because of many inherent performance advantages, split beam laser signals are typically employed by most LADAR systems. A single beam may be split into several beamlets spaced apart from one another by an amount determined by the optics package (not shown) aboard the platform **115** transmitting the LADAR signal **705**. Each pulse of the single beam is split, and so the LADAR signal **705** transmitted during the elevational scan **707** in FIG. **7**B is actually, in the illustrated embodiment, a series **711** of grouped beamlets **713** (only one indicated). The gimbaled LADAR sensor **103** transmits the LADAR signal **705** while scanning elevationally **707** and azimuthally **708**. The LADAR signal **705** is continuously reflected back to the platform **115**, where it is detected and captured.

The characteristics of the LADAR signal **705** will be a function of the LADAR sensor **103**, which will, in turn, be a function of the mission in a manner known to the art. The LADAR sensor **300**, shown in FIG. **3**A-FIG. **3**B, splits a single 0.2 mRad $1/e^2$ laser pulse into septets with a laser beam divergence for each spot of 0.2 mRad with beam separations of 0.4 mRad. The optics package includes fiber optical array (not shown) having a row of seven fibers spaced apart to collect the return light. The fibers have an acceptance angle of 0.3 mRad and a spacing between fibers that matches the 0.4 mRad far field beam separation. An elevation scanner (not shown) spreads the septets vertically by 0.4 mRad as it produces the vertical scan angle. The optical transceiver including the scanner is then scanned azimuthally to create a full scan raster.

Assume the LADAR system **100** identifies the target **710** as an object of interest, and wishes to continue observing the object. As is shown in FIG. **7**C, the platform **115** flies a circular loiter pattern **717** over the target area **715**, including the current surveillance area **712**. In the illustrated embodiment, the loiter pattern **717** is in a clockwise direction, but could alternatively be counterclockwise. The LADAR system **100** can then look out to the side and examine a portion **718**, the constant track and surveillance area, of the area **712** being circled. If the platform **115** flew level, the loitering radius for the loiter pattern **717** would need to be large enough to allow the LADAR system **100** look down to see the ground at the maximum gimbal lookdown angle. If, however, bank-to-turn guidance is used, the platform **115** will bank into the turn, providing the sensor with additional lookdown capability.

The bank angle Θ of the platform **115**, shown in FIG. **7**C, is a function of the turn radius and the velocity of the platform **115**. For highly maneuverable platforms, the bank angle Θ can exceed 60°. The banking of the platform **115** rotates the LADAR system **100** and provides additional down-look capability for the seeker relative to the ground. Depending on the bank angle Θ, the LADAR system **100** could look straight down or even past vertical. This is evident from the indicated coverage cone **721** in FIG. **7**C.

More particularly, FIG. **7**C shows two areas **712**, **718** on the ground below the flight path **703**. The area **718** shows the portion of the ground which is always visible to the LADAR system **100**, regardless of the position of the platform **115** along its flight path **703**. The area **712** is the additional area which can be seen by the LADAR system **100**, depending on the position of the platform **115** along its flight path **703**. The circle **721** drawn on the ground below the loiter pattern **717** of the flight path **703** shows the line where the LADAR system **100** is looking straight down. If the radius of the loiter pattern **717** is comparable to or smaller than the altitude **724** of the platform **115** much of the area **718** is viewed at steep angles to the ground. This facilitates use in urban or forested target areas where terrain masking is a problem for sensors working at shallow depression angles.

Returning now to FIG. **4**, the illustrated embodiment also includes an on-gimbal laser designator **409** that provides a laser designator mode of operation. The laser designator **409** and associated turning prism **410** are better illustrated in FIG. **8**A-FIG. **8**C. More particularly, the laser designator **409** produces a pulsed laser beam **800** that may be used for target designation. FIG. **8**A-FIG. **8**C illustrates the emission of the pulsed beam **800** from the laser designator **409** through the turning prism **410** within the chamber **109** and behind the window **118**. Note that it is possible to use the LADAR transmitter for designation but, since the power and beam characteristics normally required for designation are different from those required for LADAR operation, the laser design will be an undesirable compromise between the two requirements. The designator optics can be strap-down, as in the illustrated embodiment, or equipped with scanning mechanisms (not shown).

More particularly, the laser designator **409** is located on the sensor **103** and generates a laser beam **800**. The laser beam **800** is directed off the sensor **103** by the turning prism **410** in

a direction parallel to the optical axis **406** of the telescope **803**. Referring now to FIG. **9**A and FIG. **9**B, the sensor **103** includes a scan mirror **903** that may be moved between two positions, one for use in LADAR operation and one for use in SAL, or designation, operations. The scanning mirror **903** is shown in the LADAR position. The scanning mirror **903** is mounted to and moved by elevation scanner motor **806**, shown in FIG. **8**B.

When the sensor **103** is being used in the LADAR mode, light from the LADAR laser is directed into the far field and falls on the target area as discussed above relative to FIG. **7**A-FIG. **7**C. Scattered light **901** from the target area is collected by the telescope **803** which directs it onto the elevation scan mirror **903**. The scattered light **901** is then directed upward through the optical train **904** by the elevation scan mirror **903**, and is focused onto the LADAR detector fiber array **905**. The high speed scanner rotates the elevation scan mirror **903** through a small angle center around 45°. This provides the fiber array **905** with a view of the target scene at different elevations. The external gimbal **106** is used to provide stabilization and to scan the sensor **103** in azimuth so the entire target area can be examined by the LADAR and a three dimensional scene image can be formed.

FIG. **10**A and FIG. **10**B show the sensor **103** when it is being used in the SAL mode. Moving from the LADAR mode to the SAL mode is accomplished by flipping the elevation scan mirror **903** of the telescope optical path. The final position of the scanning mirror **903**, as shown in FIG. **10**A and FIG. **10**B, is not critical as long as it is out of the way of the SAL detector optical aperture **1004** so that the SAL detector **1002** has a clear view through the telescope **803**. It is assumed that the target is being designated by a source external to the platform **115** in this particular embodiment. Scattered light **901** coming from the target falls on the telescope **803**. The SAL detector **1002** does not utilize all of the light falling on the telescope **803**, but rather, only light **1001** which falls on the shaded area **1003** shown in FIG. **10**A. The SAL detector input aperture **1004** is placed at the exit pupil of the telescope **803** and the shaded area **1003** represents the portion if the telescope **803** input aperture subtended by the SAL detector aperture **1004** at the entrance to the telescope **803**.

Since SAL mode detector and optics are located at the exit pupil of the sensor telescope **803**, the SAL optics have access to the entire angular field of regard of the telescope **803** but utilize only a specific, unmasked portion **1003** of the telescope **803** input aperture for light collection. This allows the SAL mode to use the optical magnification of the telescope **803** while having an optical path which is unobstructed by the telescope **803** secondary supports **909**. The tradeoff is that only a portion of the entire telescope **803** aperture is used by the SAL detector. This limits the effective range of that mode but it preserves linearity and limits noise induced by the telescope **803** supports **909**. The SAL sensor range should still be adequate for most missile applications, especially where lock-on before launch capability is not required. The small SAL mode optics make packaging easier and lower system cost. Both of these benefits are significant in small missile applications.

The scanning mirrors currently used in most LADARs are driven by placing them on a motor shaft. The motor controller then moves the mirror through the desired pattern needed for LADAR operation. These are usually high torque motors and moving them through large angles can be difficult because it involves moving across different motor windings where the available torque is limited. While the mirror **903** is being flipped from the LADAR position to the SAL position and back, neither mode is operational so the mirror can be driven open loop through the low torque region using the rotor and mirror inertia. Alternatively, a small set of secondary windings can be used to aid in the transition. Scanning mirrors can be controlled in a number of ways the specific method is not important, only the fact that it is used as part of the optical train in the LADAR mode and is moved out of the way for the SAL mode.

Moving back to the LADAR mode is accomplished in a similar fashion by flipping the scanning mirror **903** back to the position shown in FIG. **9**A and FIG. **9**B so that it can be used to direct the light into the LADAR detectors. Moving back and forth between the two modes can be done as often as the operational scenario requires, but the two modes cannot be used simultaneously.

The LADAR system **100** can be used to locate and track the targets, e.g. the target **710** in FIG. **7**A, and the coordinate information passed to the laser designator **409** in a number of ways. For instance, coordinate information may be passed as the coordinates of the target **710**, derived from Global Positioning System ("GPS") coordinates platform **115** or as a targeting direction using an inertial measurement unit ("IMU") aboard the platform **115**. In the illustrated embodiment, the LADAR sensor **103** and the designator **709** are aligned to allow pointing and targeting information to be shared directly between the two. Thus, the LADAR system **100** can be operated in LADAR mode as illustrated in FIG. **7**A to locate the target **710**. The LADAR system **100** will yield three-dimensional data describing the location of the target **710**, which can then be passed to the control of the laser designator **409**. This information can then be used to designate the target **710**.

If the laser designator **409** and sensor **103** wavelengths are different, both can be operated simultaneously. If the laser designator **409** and sensor **103** are at the same wavelength, then the laser designator **409** might interfere with the LADAR operation of the sensor **103** when it is actively pulsing. This can be easily addressed because the duty cycle of the laser designator **409** is very low so the LADAR detectors (not shown) can be turned off during the designation pulse without significant loss in imaging capability.

The LADAR detectors can even be gated to pick up the return from the designation beam **800** so that the position of the designation beam **800** relative to the LADAR target image can be determined. This is an accurate way to maintain alignment between the two modes if the laser designator **409** has its own on-board steering mechanism. As the LADAR system **100** loiters, the laser designator **409** can maintain a spot on the target **710** as long as the target **710** remains in area **718** of FIG. **7**A. Illuminating the top of the target **710** would prevent masking of the designator spot as the platform **115** executes its flight pattern. Alternatively, a nearby spot could be designated and the relative coordinates passed on for further use.

This concludes the detailed description. The particular embodiments disclosed above are illustrative only, as the invention may be modified and practiced in different but equivalent manners apparent to those skilled in the art having the benefit of the teachings herein. Furthermore, no limitations are intended to the details of construction or design herein shown, other than as described in the claims below. It is therefore evident that the particular embodiments disclosed above may be altered or modified and all such variations are considered within the scope and spirit of the invention. Accordingly, the protection sought herein is as set forth in the claims below.

What is claimed:

1. A method, comprising:

flying an airborne vehicle through an environment;

loitering over an area within a field of regard for the airborne vehicle;

scanning a LADAR signal forward and to at least one side and at least 90° off a boresight into the field of regard while loitering; and

tracking a target while loitering.

2. The method of claim **1**, wherein flying the airborne vehicle includes flying a flying submunition, a guided weapon system, a reconnaissance drone, or a manned aircraft.

3. The method of claim **1**, wherein scanning the LADAR signal includes scanning in azimuth through 180°.

4. The method of claim **3**, wherein scanning in azimuth through 180° includes scanning through ±90° off the boresight.

5. The method of claim **1**, further comprising banking the airborne vehicle while loitering.

6. The method of claim **1**, further comprising designating the target from aboard the airborne vehicle.

7. An apparatus, comprising

a LADAR sensor;

a gimbal to which the LADAR sensor is mounted, the gimbal being capable of scanning in azimuth sufficient to provide a look down and loitering capability;

a platform defining a chamber in which the LADAR sensor and gimbal are housed; and

a faceted window in the platform closing the chamber.

8. The apparatus of claim **7**, wherein the gimbaled transceiver is capable of scanning in azimuth through at least 180°.

9. The apparatus of claim **8**, wherein the gimbaled transceiver is capable of scanning through at least ±90° off a boresight.

10. The apparatus of claim **7**, wherein the gimbaled transceiver is capable of transmitting at least 90° off a boresight.

11. The apparatus of claim **7**, wherein the platform is a vehicle.

12. The apparatus of claim **11**, wherein the vehicle is an airborne vehicle.

13. The apparatus of claim **7**, wherein the window is hemispherical.

14. The apparatus of claim **7**, wherein the window is hyperspherical.

15. A wide-angle LADAR system, comprising:

a platform defining a chamber;

a faceted window closing the chamber; and

a gimbaled LADAR sensor housed in the closed chamber capable of scanning in azimuth substantially through 180° and housed in the chamber to scan through the faceted window.

16. The LADAR system of claim **15**, wherein the platform is a vehicle.

17. The LADAR system of claim **16**, wherein the vehicle is an airborne vehicle.

18. The LADAR system of claim **15**, further comprising a laser designator mounted on-gimbal with the LADAR sensor.

19. An apparatus, comprising:

an airborne vehicle defining a chamber in the forward end thereof;

a faceted window closing the chamber;

a gimbaled LADAR sensor housed in the closed chamber capable of scanning in azimuth substantially through 180° and housed in the chamber to scan through the faceted window; and

a laser designator mounted on-gimbal with the LADAR sensor.

20. The apparatus of claim **19**, wherein the gimbaled transceiver is capable of scanning in azimuth through at least 180°.

21. The apparatus of claim **19**, wherein the laser designator and the LADAR sensor are co-aligned.

22. The apparatus of claim **19**, wherein the laser designator is pointed independently of the gimbal pointing direction.

23. The apparatus of claim **19**, wherein the laser designator receives pointing and targeting information from the LADAR sensor.

24. The apparatus of claim **19**, further comprising:

an off-gimbal LADAR laser; and

a large mode area fiber over which the beam generated by the LADAR laser is transmitted to the LADAR sensor.

25. A method, comprising:

flying an airborne vehicle through an environment;

scanning a LADAR signal forward and to at least one side and at least 90° off a boresight into a field of regard; and

designating a target from aboard the airborne vehicle.

26. The method of claim **25** wherein the designation employs LADAR information extracted aboard the airborne vehicle.

27. The method of claim **25**, wherein the designation is performed by the LADAR transmitter.

28. The method of claim **25**, wherein the designation is performed by a laser designator separate from the LADAR transmitter.

29. The method of claim **28**, where the designation is performed on a gimbal to which the LADAR transmitter is mounted.

30. The method of claim **25**, wherein scanning the LADAR signal includes scanning in azimuth through 180°.

31. The apparatus of claim **30**, wherein the laser designator and the LADAR sensor are co-aligned.

32. The apparatus of claim **30**, wherein the laser designator is pointed independently of the gimbal pointing direction.

33. The apparatus of claim **30**, wherein the laser designator receives pointing and targeting information from the LADAR sensor.

34. The LADAR system of claim **15**, further comprising:

an off-gimbal LADAR laser; and

a large mode area fiber over which the beam generated by the LADAR laser is transmitted to the LADAR sensor.

35. The method of claim **30**, wherein scanning in azimuth through 180° includes scanning through ±90° off the boresight.

36. An apparatus, comprising

a LADAR sensor;

a gimbal to which the LADAR sensor is mounted, the gimbal being capable of scanning in azimuth sufficient to provide a look down and loitering capability; and

a laser designator mounted on-gimbal with the LADAR sensor.

37. The apparatus of claim **36**, wherein the gimbal is capable of scanning in azimuth through at least 180°.

38. The apparatus of claim **37**, wherein the gimbal is capable of scanning through at least ±90° off a boresight.

39. The apparatus of claim **36**, wherein the gimbal is capable of transmitting at least 90° off a boresight.

40. The apparatus of claim **30**, wherein the gimbaled LADAR sensor is capable of transmitting at least 90° off a boresight.

41. The apparatus of claim **30**, wherein the apparatus is a vehicle.

42. The apparatus of claim **36**, wherein the vehicle is an airborne vehicle.

* * * * *